Product Options – 2 1/4”
Handles And Locks

GRAHAM ARCHITECTURAL PRODUCTS

Series: 6700

Drawing 1/2 Scale – For Custom Size Drawing Contact Graham

Note: Sealant Not Shown On Details. Consult Technical Services At Factory For Sealing Procedures.

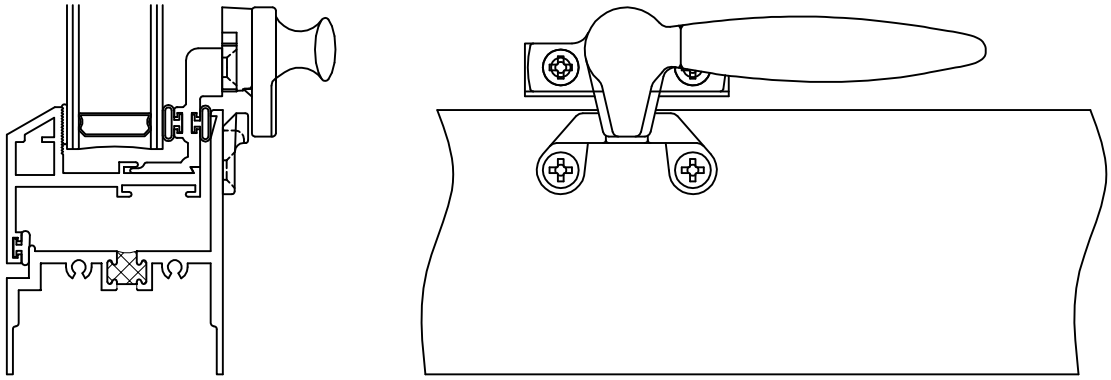

White Bronze Cam Handle
With Strike

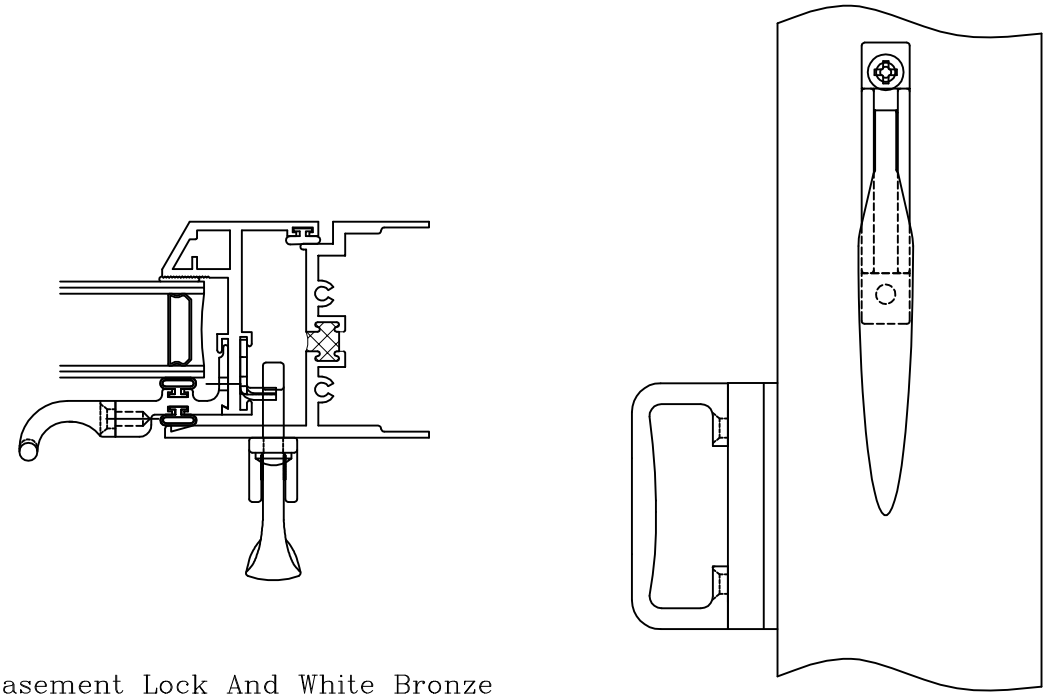

Casement Lock And White Bronze
Pull Handle

1551 Mt. Rose Avenue, York, Pennsylvania 17403-2909 • 800/755-6274 • Fax: 800/366-5097
Web Site: www.grahamwindows.com