Projected/Projected – 4 1/2"

GRAHAM ARCHITECTURAL PRODUCTS

Series: 6900 Manufacturing Code: 6902

Drawing 1/2 Scale – For Custom Size Drawing Contact Graham

Note: Sealant Not Shown On Details. Consult Technical Services At Factory For Sealing Procedures.

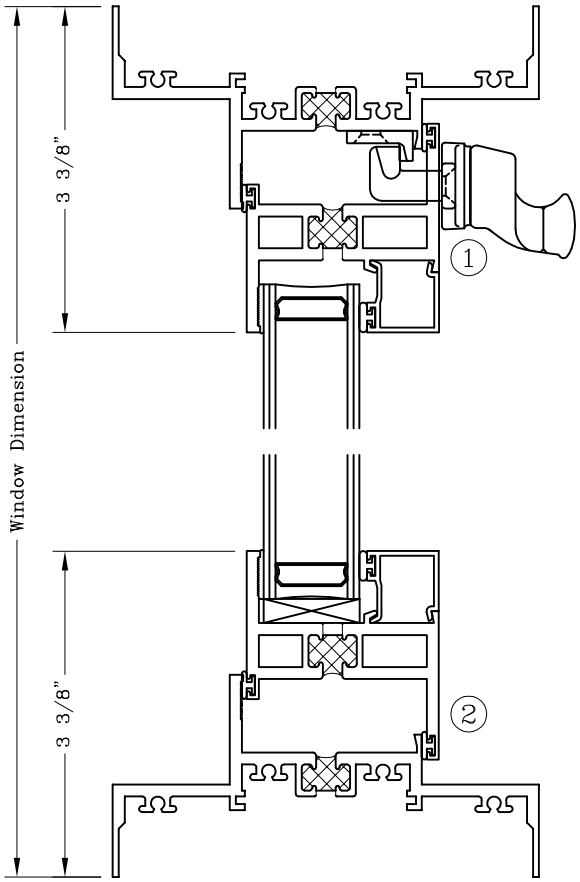

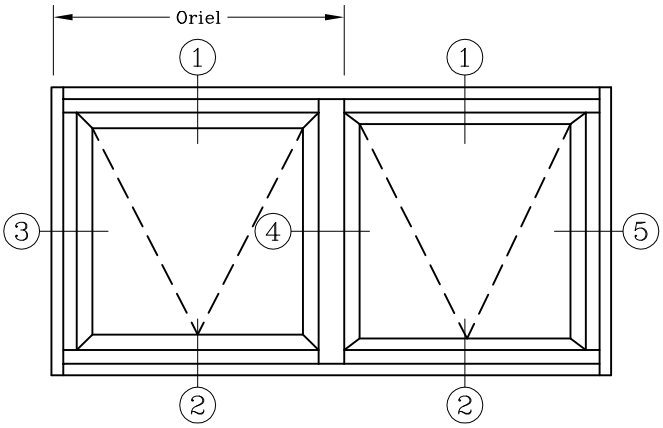

ELEVATION

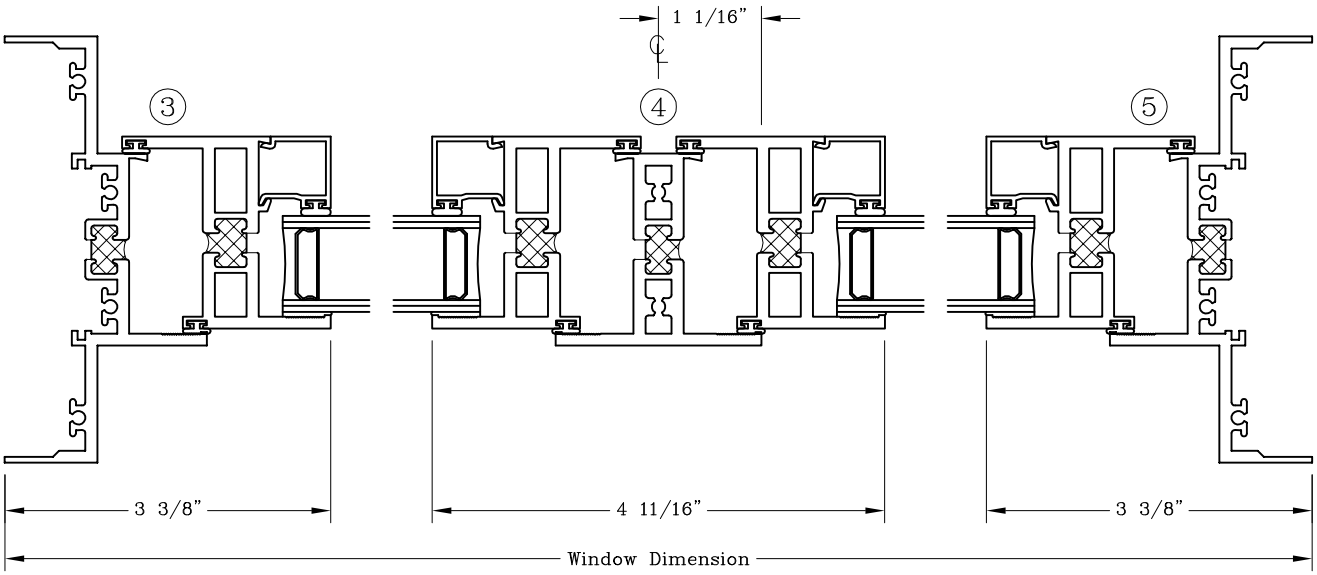

Note: Dashed Lines Represent Inswing Vented Units Solid Lines Represent Outswing Vented Units; Lines Converge At Hinge Side Of Vent

1551 Mt. Rose Avenue, York, Pennsylvania 17403-2909 • 800/755-6274 • Fax: 800/366-5097
Web Site: www.grahamwindows.com