Blast Mitigation – 2 1/4"
Projected Outswing

GRAHAM ARCHITECTURAL PRODUCTS

Series: B6500 Manufacturing Code: B6501

Drawing 1/2 Scale – For Custom Size Drawing Contact Graham

Note: Sealant Not Shown On Details. Consult Technical Services At Factory For Sealing Procedures.
For Blast Pressures And GSA Levels Contact Factory

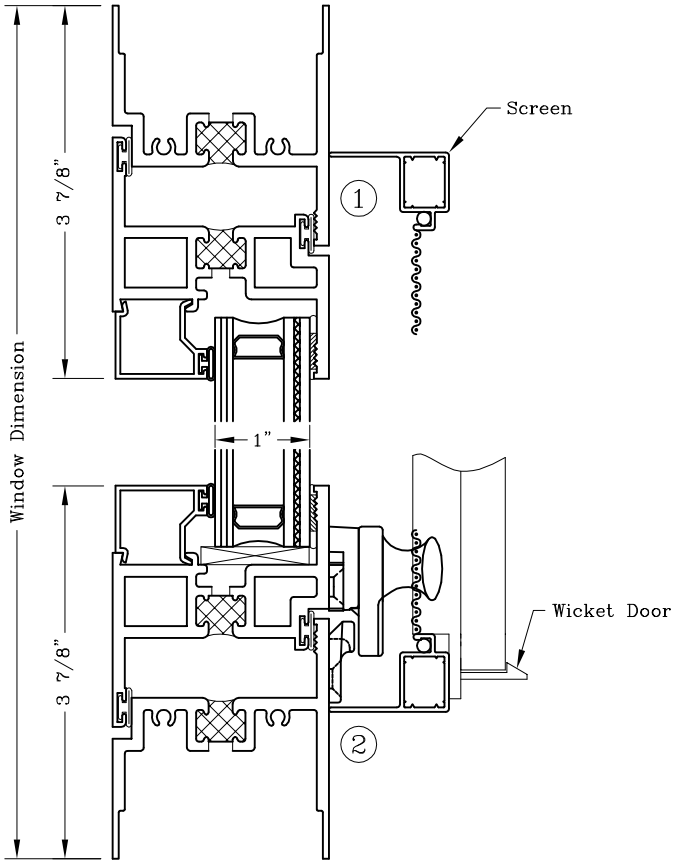

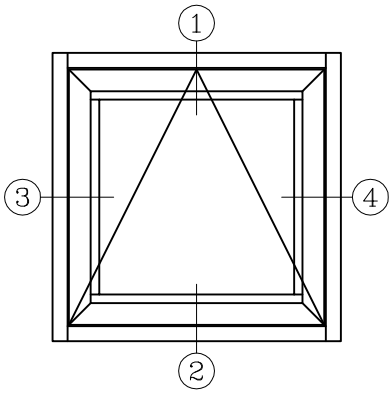

ELEVATION

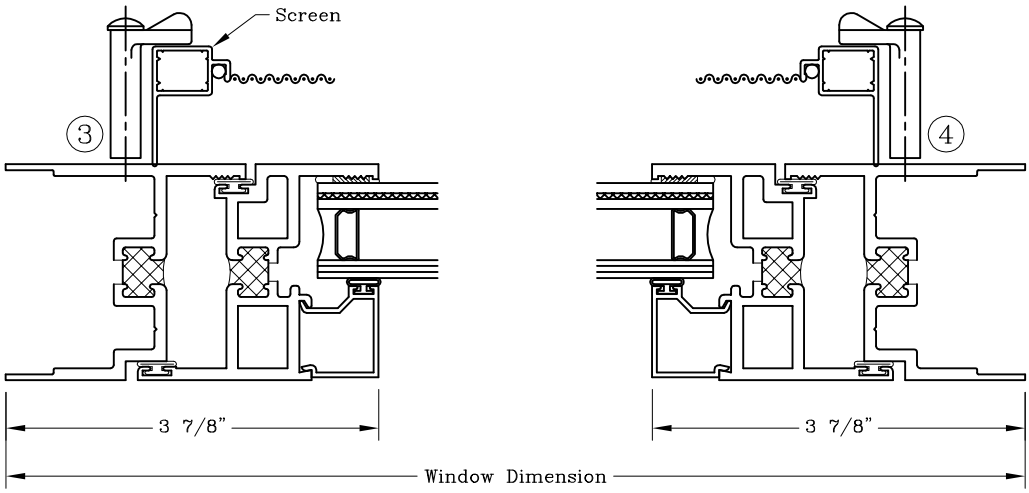

1551 Mt. Rose Avenue, York, Pennsylvania 17403-2909 • 800/755-6274 • Fax: 800/366-5097
Web Site: www.grahamwindows.com