Projected – 2 1/2"
Equal Sightline
Outswing Awning/Fixed
Series: GS6600 Manufacturing Code: GS6605F

Drawing 1/2 Scale – For Custom Size Drawing Contact Graham

Note: Sealant Not Shown On Details. Refer To General Installation Instructions.

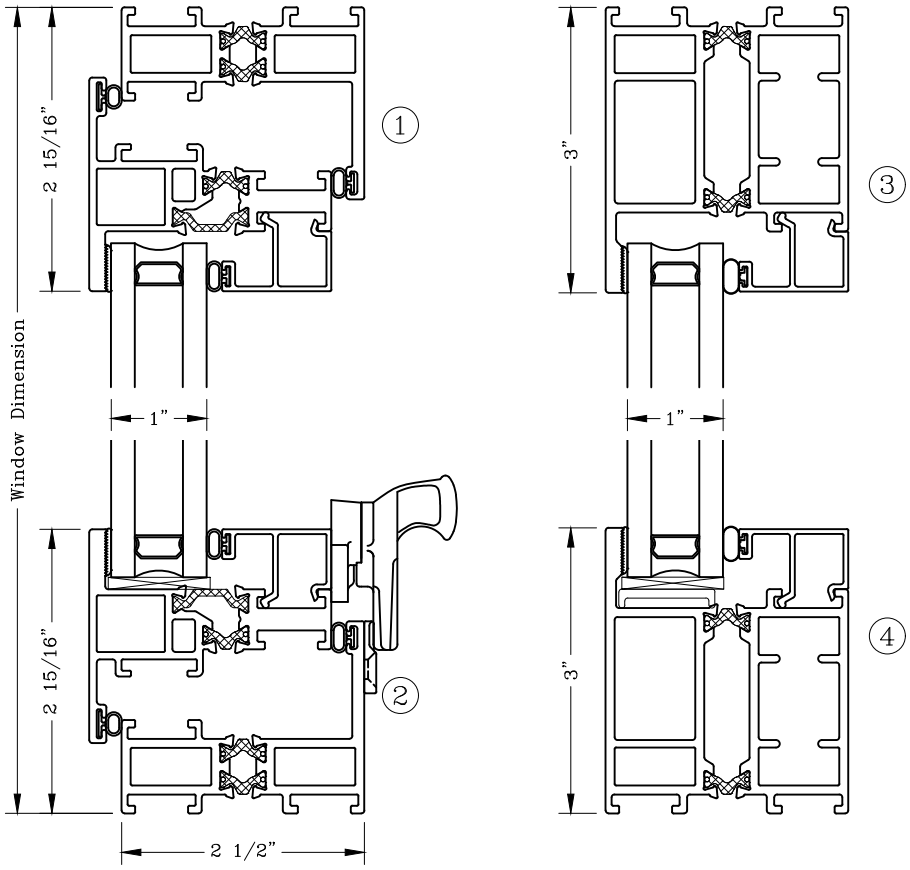

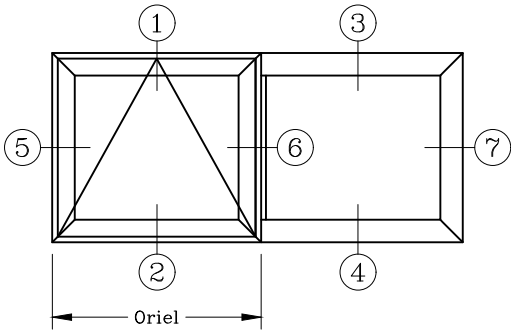

ELEVATION

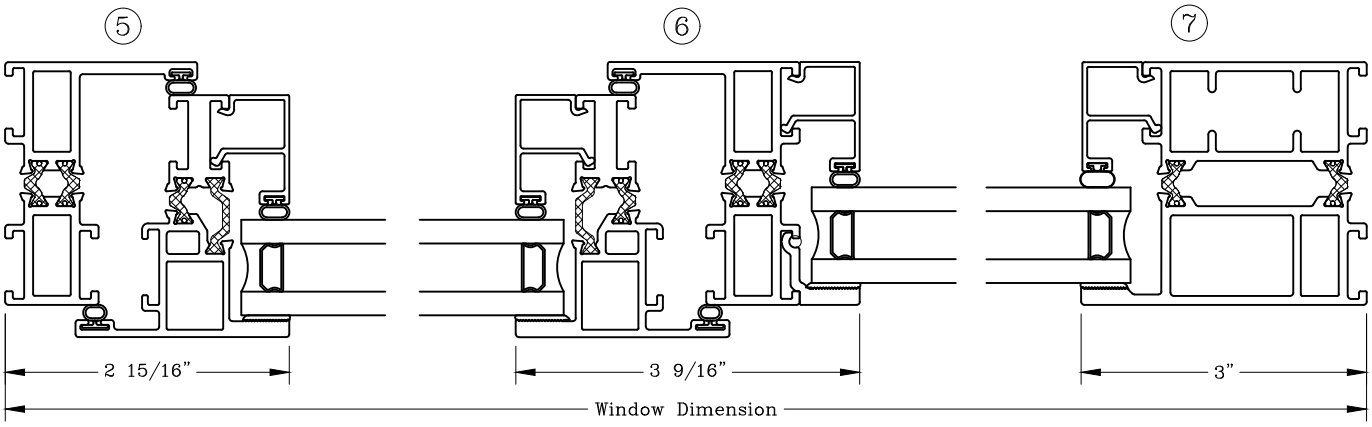

Note: Dashed Lines Represent Inswing Vented Units Solid Lines Represent Outswing Vented Units; Lines Converge At Hinge Side Of Vent

1551 Mt. Rose Avenue, York, Pennsylvania 17403-2909 800/755-6274 Fax: 800/366-5097
Web Site: www.grahamwindows.com