Preset Panning

Series: Accessories Manufacturing Code: GT–PPN13

Drawing 1/2 Scale – For Custom Size Drawing Contact Graham

Note: Sealant Not Shown On Details. Consult Technical Services At Factory For Sealing Procedures.

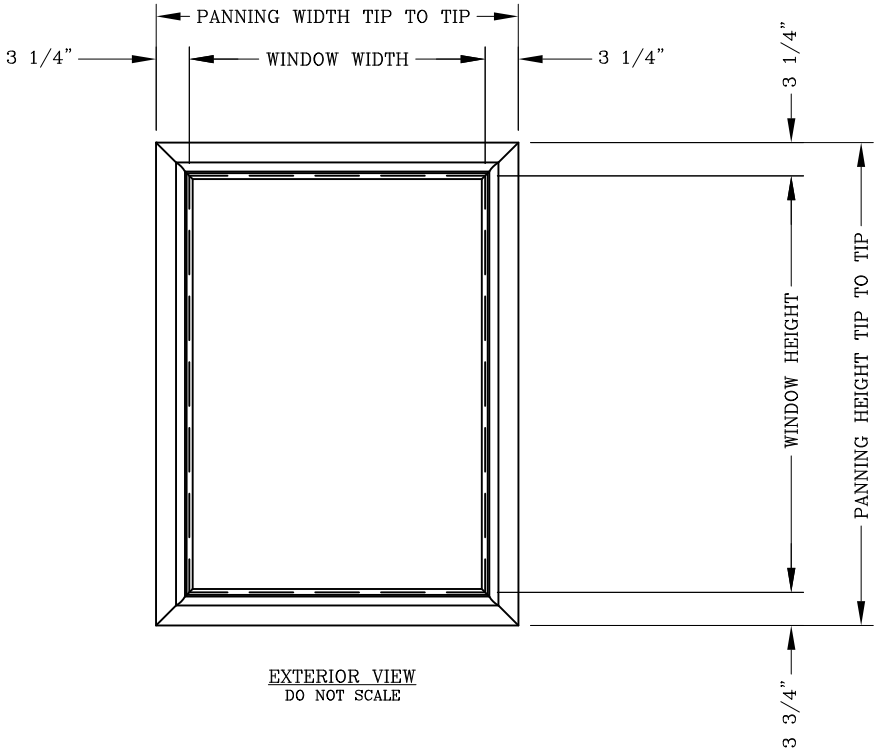

EXTERIOR VIEW
DO NOT SCALE

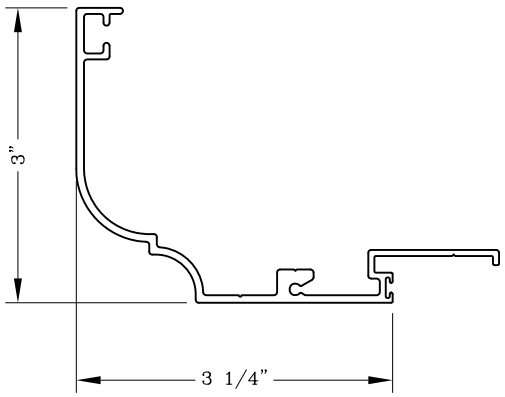

851983
HEAD / JAMB / SILL
HISTORIC
PRESET PANNING