Single Hung Historic – 4”
Side Load

.

GRAHAM ARCHITECTURAL PRODUCTS

Series: GT2200 (Formerly: 2200) MFG Code: GT2202.4000

Drawn 1/2 Scale – For Custom Size Drawings Contact Graham

Note: Sealant not shown on details. Consult Technical Services for sealing proceedures

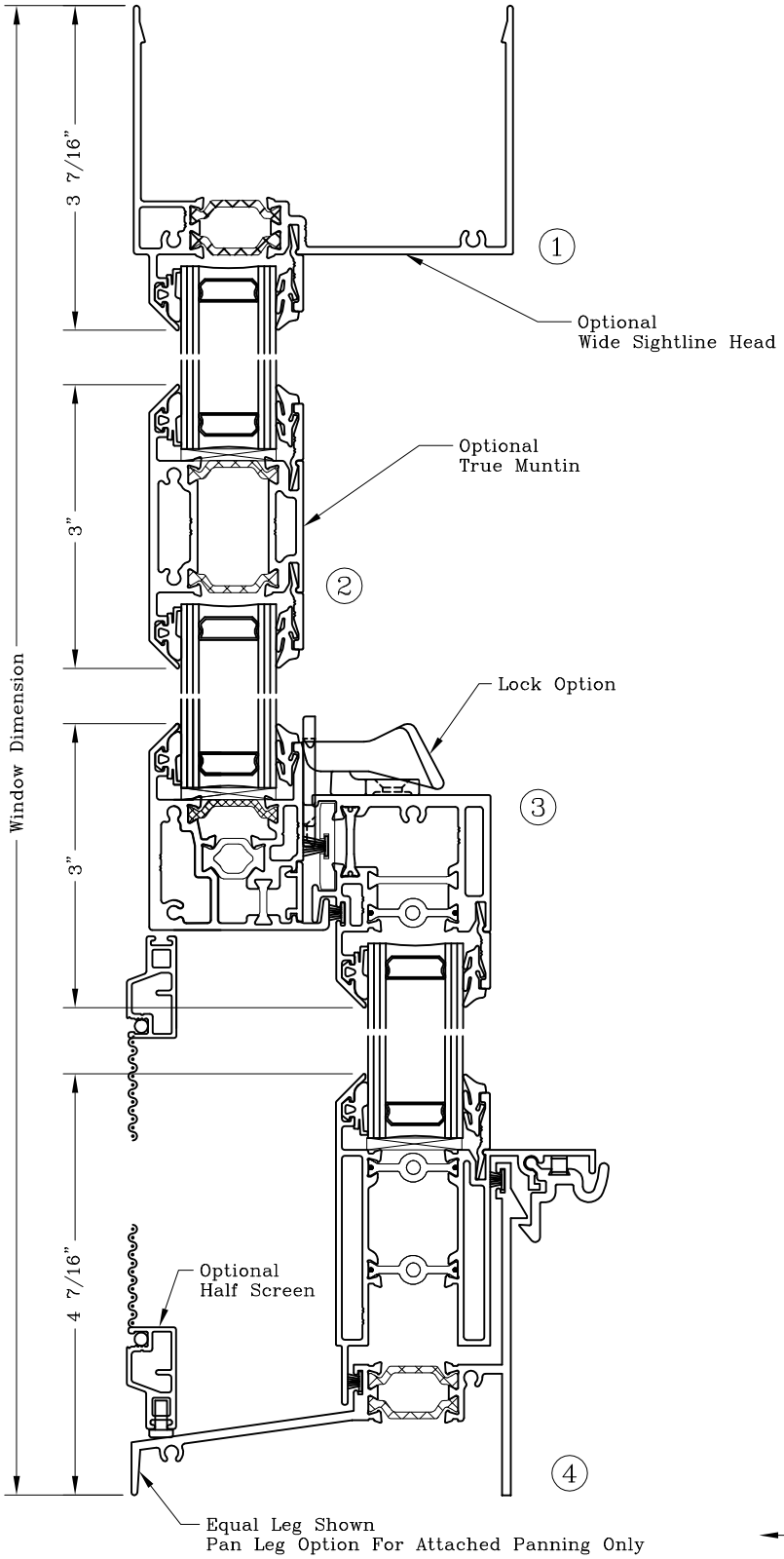

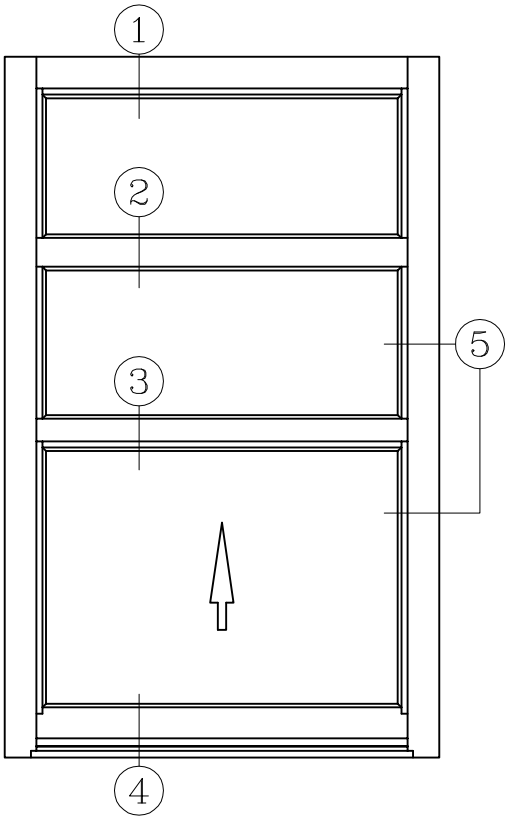

ELEVATION

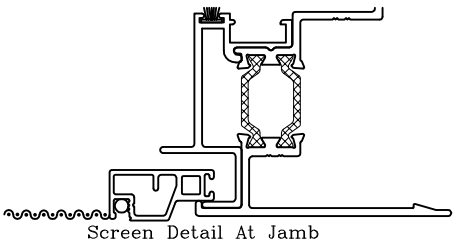

Screen Detail At Jamb

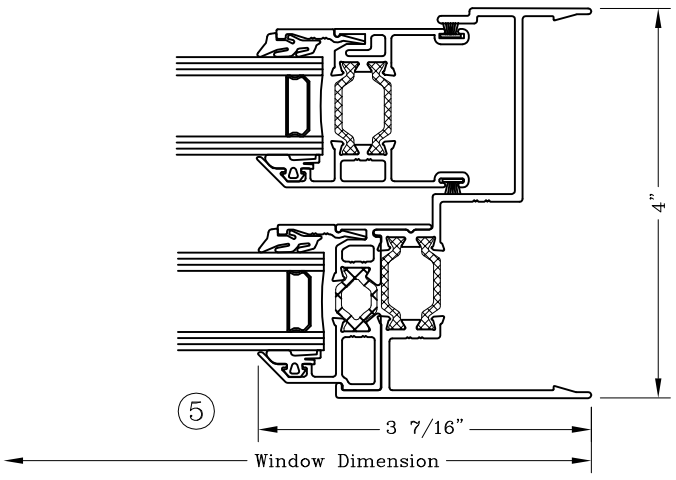

1551 Mt. Rose Avenue, York, Pennsylvania 17403-2909• 800/755-6274 • Fax: 800/366-5097
Web Site: www.grahamwindows.com