Glazing Options – 4 1/2"

GRAHAM ARCHITECTURAL PRODUCTS

Series: S1500 Manufacturing Code: S1507

Drawing 1/2 Scale – For Custom Size Drawing Contact Graham

Note: Sealant Not Shown On Details. Consult Technical Services At Factory For Sealing Procedures.

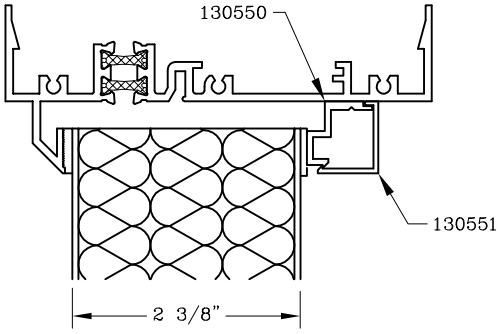

2 3/8" Panel
Glazing Bead

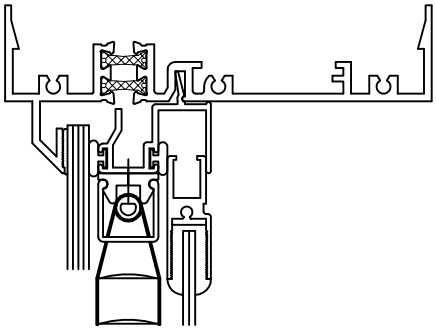

Lift–In Guardian
Horizontal Glazing Bead
Head

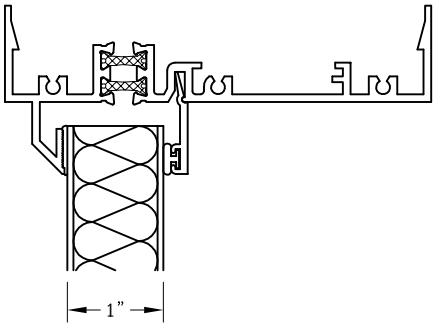

1" Panel
Glazing Bead

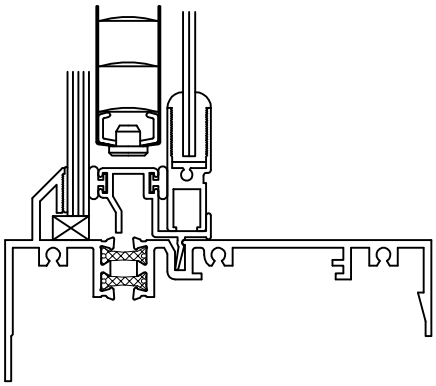

Lift–In Guardian
Horizontal Glazing Bead
Sill

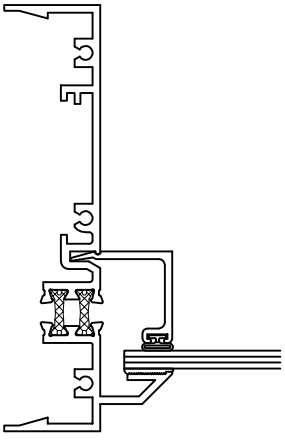

Single Glazed
Vertical Glazing Bead
Jamb

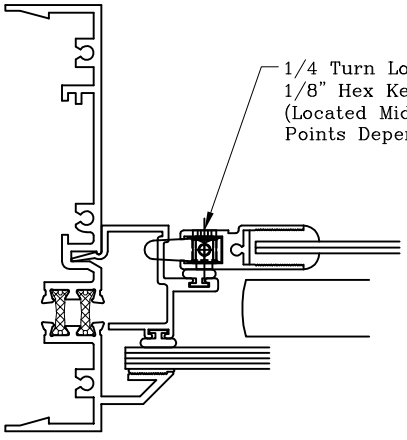

Lift–In Guardian
Vertical Glazing Bead
Jamb

1551 Mt. Rose Avenue, York, Pennsylvania 17403-2909 • 800/755-6274 • Fax: 800/366-5097
Web Site: www.grahamwindows.com